ISO/ABMA BASIC LOAD RATINGS		
Rating	Newtons	Lbs
DYNAMIC	9,410	2,115
STATIC	12,360	2,779

TRACK ROLLER LOAD RATINGS		
RATING	Newtons	Lbs
DYNAMIC	7,850	1,765
STATIC	10,400	2,338

MAXIMUM CLAMPING TORQUE		
Thread Type	Nm	Inch Lbs
DRY	15	132.76
LUBRICATED	7.5	66.40

RECOMMENDED MOUNTING HOLE Ø		
Limit	mm	Inch
MIN	13.050	.5138
MAX	13.075	.5148

MS NO.	NSN NO.	DRAWING NO. MCNBE-22-SB

NOTES:
1. BEARING IS PACKED WITH NLGI GRADE 2, LITHIUM BASED GREASE (UNLESS OTHERWISE SPECIFIED)
2. ALL EXPOSED STEEL SURFACES HAVE BLACK OXIDE
3. LIMITING SPEEDS:
   A. GREASE = 9,000 RPM
   B. OIL = 11,500 RPM

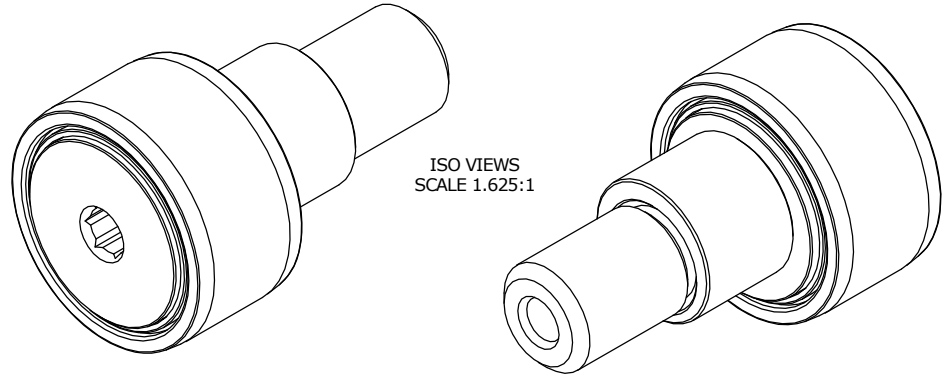

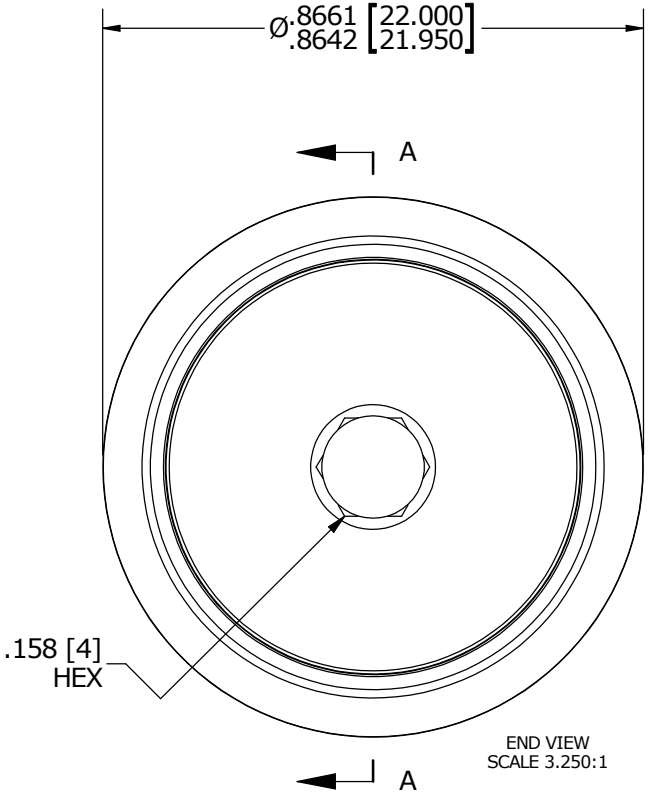

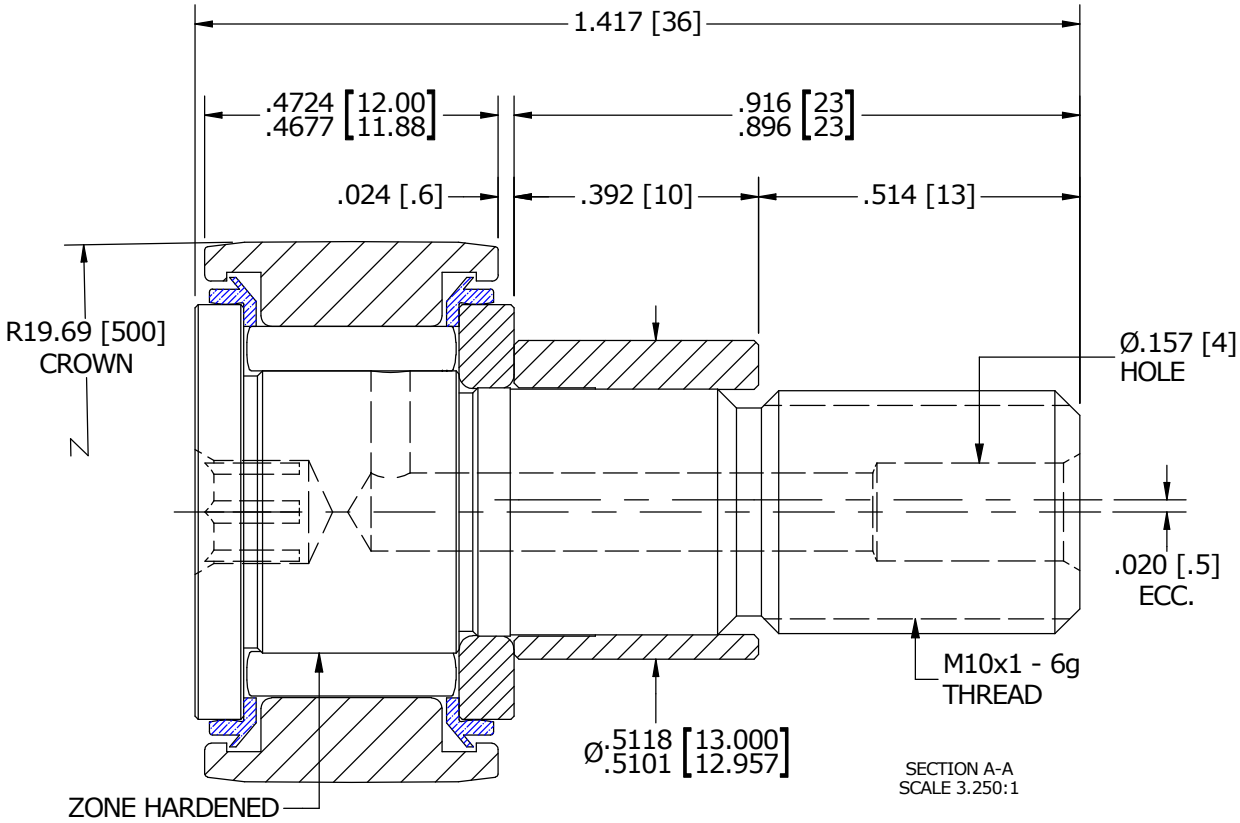

MATERIAL NOTES:

OUTER RACE - BEARING STEEL, HEAT TREATED
STUD - BEARING STEEL, ZONE HARDENED
NEEDLE ROLLER - BEARING STEEL, HEAT TREATED
WASHER - COLD ROLLED STEEL, HEAT TREATED
SEAL - SYNTHETIC
ECCENTRIC SLEEVE - COLD ROLLED STEEL

CUSTOMER PART#	XX = ± .01 XXX = ± .005 XXXX = ± .0005 ANGLES = ± 1° INCH [METRIC] FRACTION = ± 1/32	CARTER MANUFACTURING IS NOT RESPONSIBLE FOR TYPOGRAPHICAL ERRORS	**CARTER MANUFACTURING CO., INC.** GRAND HAVEN, MICHIGAN 49417			
ENGINEERING CHANGE ORDER NOTE		REVISION	PART NAME: ASSEMBLY			
		A	AUTHOR BY: HG	DRAWN BY: SGW	CHK'D BY: MD	SALES: KR	MATERIAL: NOTED
		REVISON BY: SGW	DATE: 12/12/2015	DATE: 11/12/2015	DATE: 11/23/2015	DATE: 11/12/2015	SHEET: 1 OF 2