LOAD RATINGS	
RATING	Lbs
RADIAL BASIC DYNAMIC	3,890
DYNAMIC THRUST LOAD	1,000
MAXIMUM STATIC CAPACITY	2,020

NOTES:
1. BALL BEARING COMES PREPACKED WITH GREASE
2. STUD & END CAP: ALL EXPOSED SURFACES HAVE BLACK OXIDE

MS NO. | WSN NO. | DRAWING NO. **FHRE-200-A**

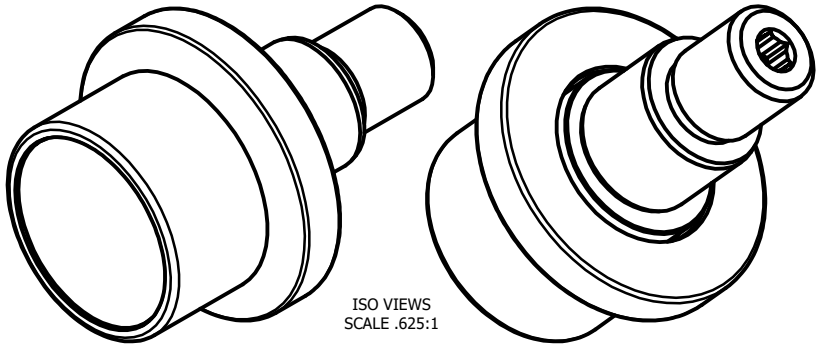

ISO VIEWS
SCALE .625:1

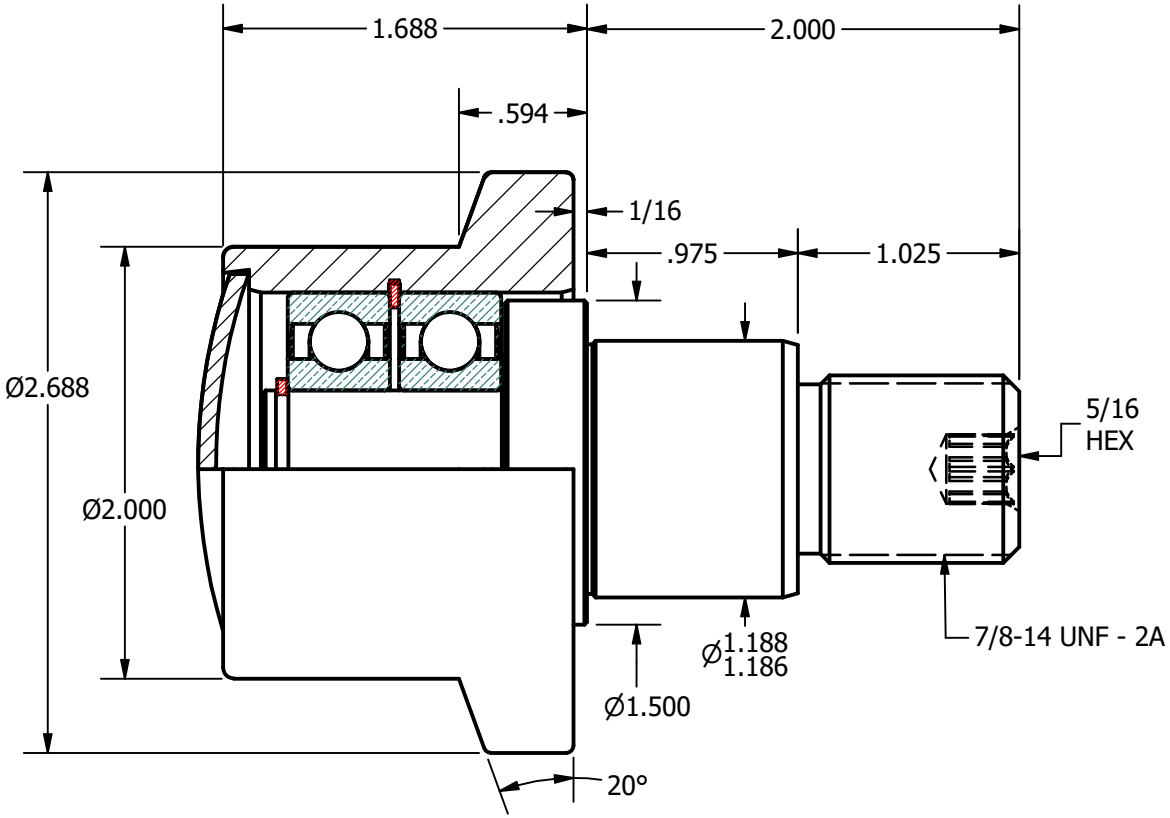

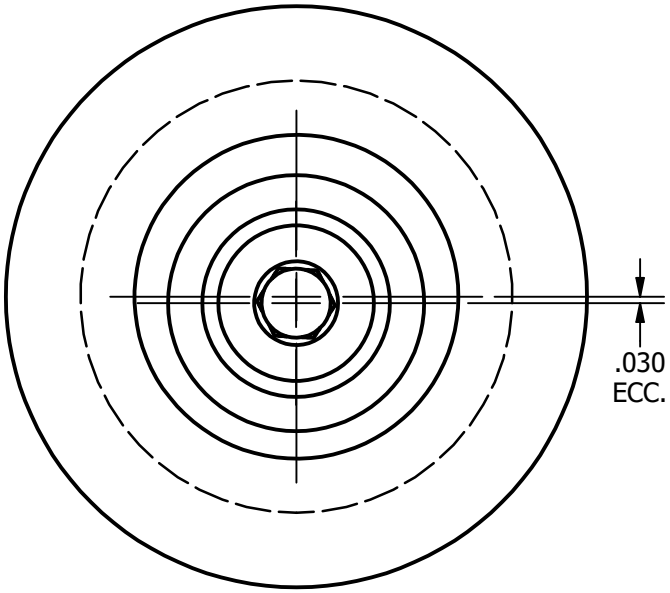

END VIEW OF STUD

MATERIAL NOTES:

OUTER ROLLER- BEARING STEEL, HEAT TREATED
STUD - COLD ROLLED STEEL
BEARING ASSY. - 6203.2RS
SNAP RINGS - SPRING STEEL
END CAP - COLD ROLLED STEEL

CUSTOMER PART#

.XX = ± .01
.XXX = ± .005
.XXXX = ± .0005
ANGLES = ± 1°
INCH [METRIC]

CHANGE NOTE:

CARTER MANUFACTURING IS NOT RESPONSIBLE FOR TYPOGRAPHICAL ERRORS

CARTER MANUFACTURING CO., INC.
GRAND HAVEN, MICHIGAN 49417

PART NAME: **ASSEMBLY** SHEET 1 OF 2

REVISION	AUTHOR. BY	DRAWN BY	CHK'D BY	SALES	MATERIAL
C	DB	JimV	MD	KR	NOTED
REV. BY	DATE	DATE	DATE	DATE	DRAWING NO.
SGW	2/18/2011	3/29/2006	2/18/2011	2/18/2011	**FHRE-200-A**