LOAD RATINGS		
RATING	Lbs	Newtons
RADIAL BASIC DYNAMIC	1,328	5,907
MAXIMUM STATIC CAPACITY	2,891	12,860

RECOMMENDED MOUNTING HOLE Ø		
Limit	Inch	mm
MIN	.4375	11.1125
MAX	.4380	11.1252

MAXIMUM CLAMPING TORQUE		
Thread Type	Inch Lbs	Nm
DRY	250	28.2
LUBRICATED	125	14.1

NOTES:
1. BEARING IS PACKED WITH NLGI GRADE 2, H1, FOOD GREASE (UNLESS OTHERWISE SPECIFIED)
2. LIMITING SPEED:
   A. GREASE = 5,400 RPM

MS NO.	NSN NO.	DRAWING NO. CSCH-28-SB

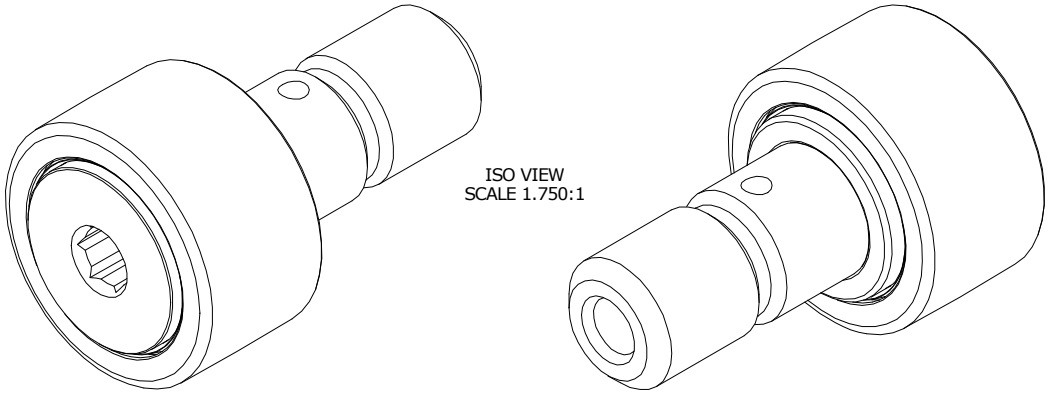

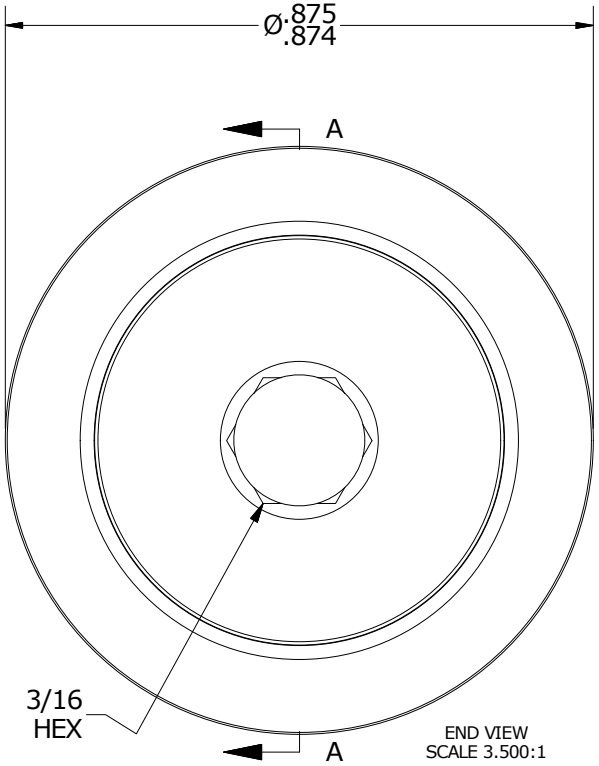

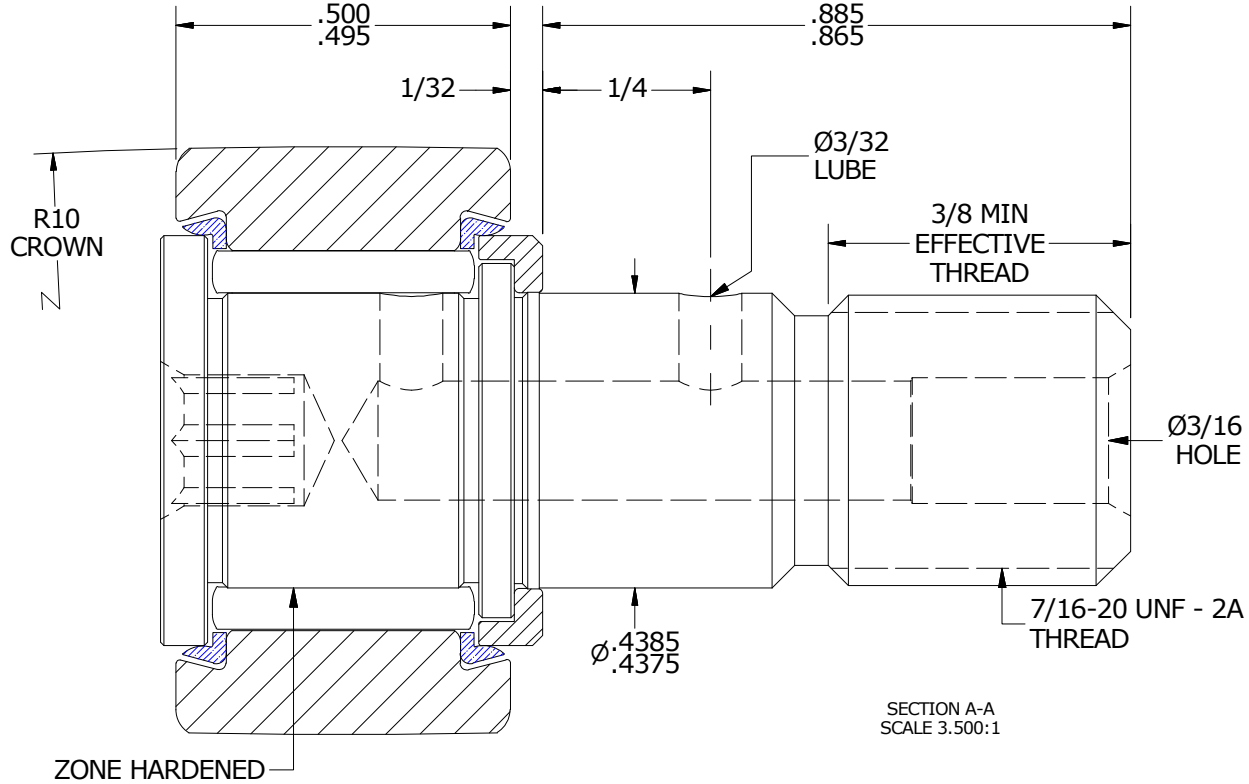

MATERIAL NOTES:

OUTER RING - 440C STAINLESS STEEL, HEAT TREATED
STUD - 440C STAINLESS STEEL, ZONE HARDENED
NEEDLE ROLLER(S) - 440C STAINLESS STEEL, HEAT TREATED
WASHER - 440C STAINLESS STEEL, HEAT TREATED
SEAL(S) - SYNTHETIC

CUSTOMER PART#	XX = ± .01 XXX = ± .005 XXXX = ± .0005 ANGLES = ± 1° INCH [METRIC] FRACTION = ± 1/32	CARTER MANUFACTURING IS NOT RESPONSIBLE FOR TYPOGRAPHICAL ERRORS		**CARTER MANUFACTURING CO., INC.** GRAND HAVEN, MICHIGAN 49417		
ENGINEERING CHANGE ORDER NOTE		REVISION		PART NAME: ASSEMBLY		
		B	AUTHOR BY HG	DRAWN BY JAF	CHK'D BY MD	SALES KR	MATERIAL NOTED
		REVISON BY SGW	DATE 5/5/2017	DATE 7/25/2006	DATE 5/4/2017	DATE 5/5/2017	SHEET 1 OF 2