LOAD RATINGS	
RATING	Lbs
RADIAL BASIC DYNAMIC	1,800
MAXIMUM STATIC CAPACITY	2,040

NOTES:
1. BEARING COMES PACKED WITH CARTER STANDARD H1 FOOD GRADE GREASE

WIS NO. | WSN NO. | DRAWING NO. CSC-36-SB

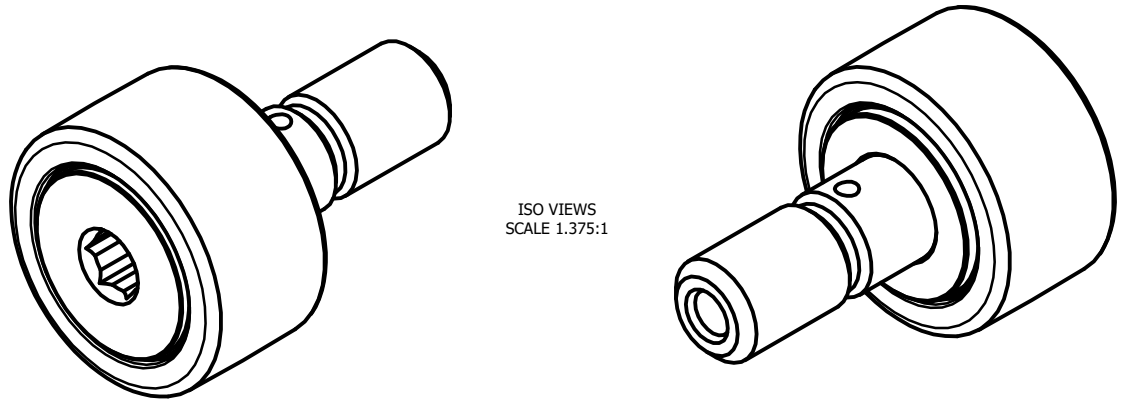

ISO VIEWS
SCALE 1.375:1

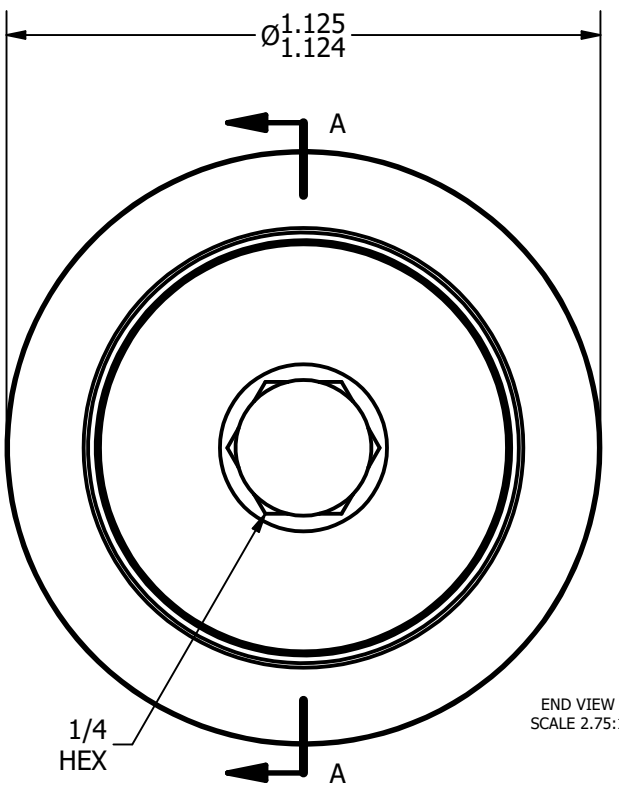

END VIEW
SCALE 2.75:1

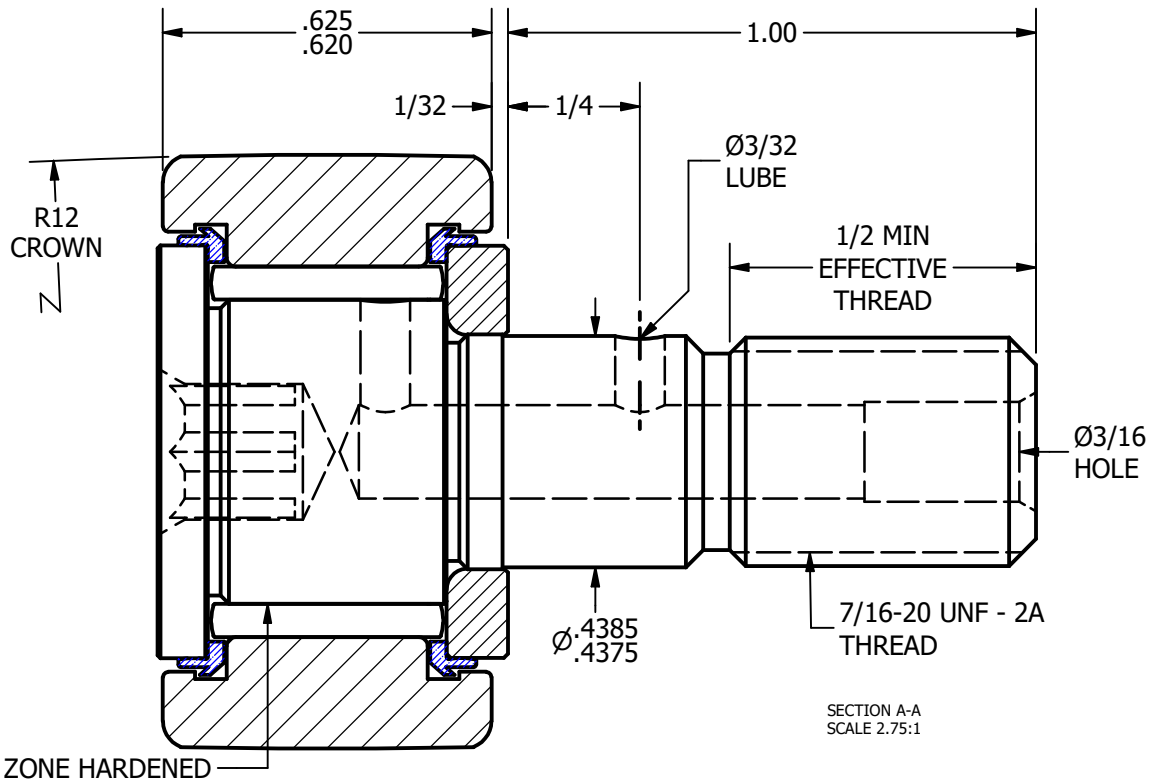

SECTION A-A
SCALE 2.75:1

MATERIAL NOTES:

OUTER RACE - 440C STAINLESS STEEL, HEAT TREATED
STUD - 440C STAINLESS STEEL, ZONE HARDENED
WASHER - 440C STAINLESS STEEL, HEAT TREATED
NEEDLE ROLLER - 440C STAINLESS STEEL, HEAT TREATED
SEAL - SYNTHETIC

CUSTOMER PART#

.XX = ± .01
.XXX = ± .005
.XXXX = ± .0005
ANGLES = ± 1°
INCH [METRIC]
FRACTION = ± 1/32

CHANGE NOTE:

CARTER MANUFACTURING IS NOT RESPONSIBLE FOR TYPOGRAPHICAL ERRORS

CARTER MANUFACTURING CO., INC.
GRAND HAVEN, MICHIGAN 49417

PART NAME: **ASSEMBLY** SHEET 1 OF 2

REVISION	AUTHOR. BY	DRAWN BY	CHK'D BY	SALES	MATERIAL
B	DB	JAF	MD	KR	NOTED
REV. BY	DATE	DATE	DATE	DATE	DRAWING NO.
SGW	7/8/2013	7/25/2006	7/8/2013	7/11/2013	**CSC-36-SB**