DRW. NO. **CCNBH-60-B**

NOTES:
1. **BEARING IS PACKED WITH GREASE**
2. **ALL EXPOSED SURFACES ARE BLACK OXIDED**

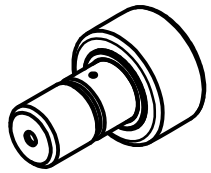

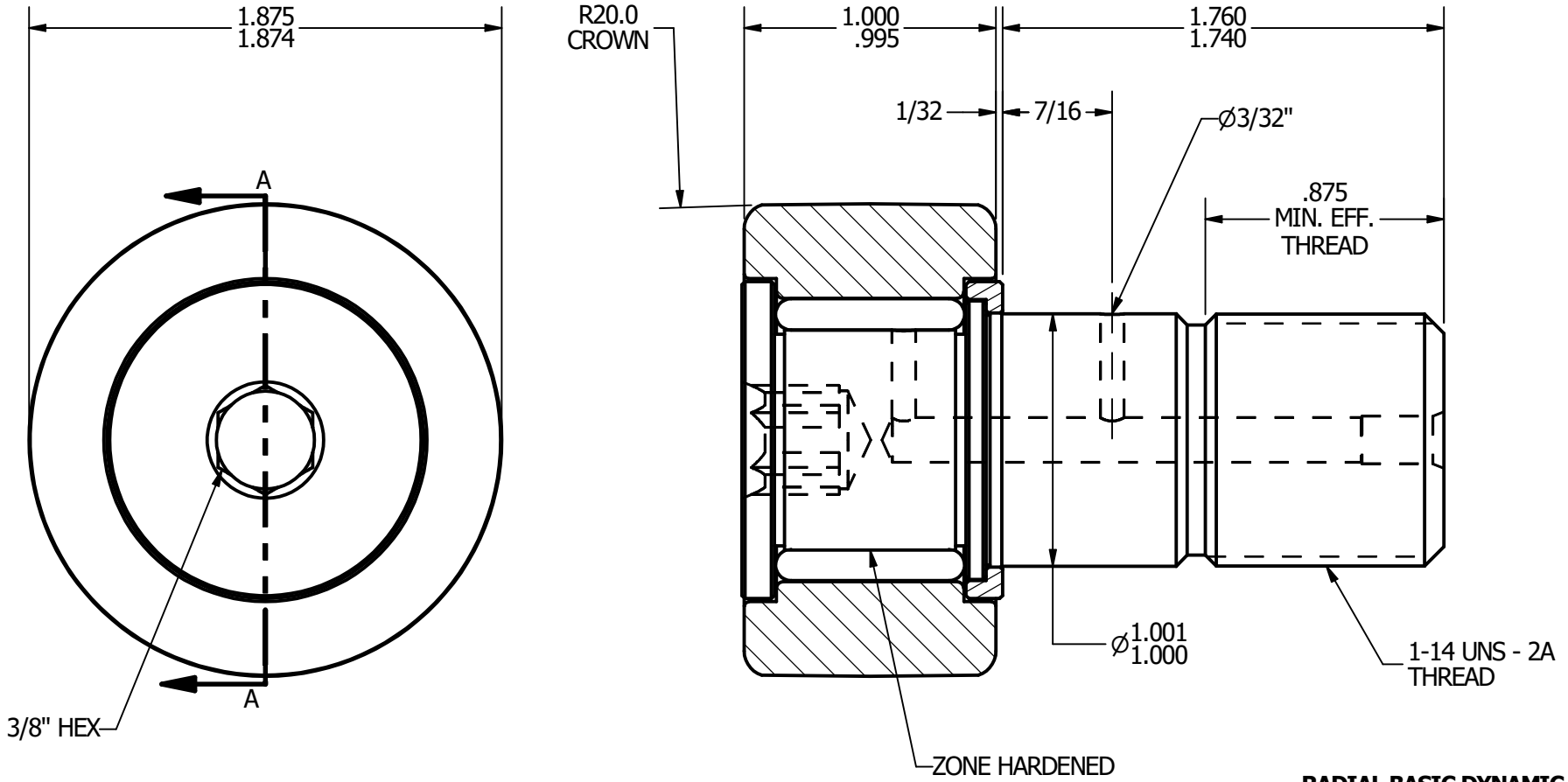

RADIAL BASIC DYNAMIC RATING (POUNDS) 6,385

MAXIMUM STATIC CAPACITY (POUNDS) 15,840

MATERIAL NOTES:

OUTER - BEARING STEEL, HEAT TREATED
STUD - BEARING STEEL, ZONE HARDENED
ROLLER - BEARING STEEL, HEAT TREATED
WASHER - COLD ROLLED STEEL, HEAT TREATED

CUSTOMER PART#

.XX = ± .01
.XXX = ± .005
.XXXX = ± .0005
ANGLES = ± 1˚
INCH [METRIC]

CHANGE NOTE:

CARTER MANUFACTURING IS NOT RESPONSIBLE FOR TYPOGRAPHICAL ERRORS

CARTER MANUFACTURING CO., INC.
GRAND HAVEN, MICHIGAN 49417

PART NAME: **Assembly** SHEET 1 OF 2

REVISION	AUTHOR. BY	DRAWN BY	CHK'D BY	SALES	MATERIAL
A	JGV	JAF	JGV	KPR	NOTED
REV. BY	DATE	DATE	DATE	DATE	DRAWING NO.
JAF	7/13/2006	7/13/2006	7/13/2006	7/12/2006	**CCNBH-60-B**