LOAD RATINGS	
RATING	Lbs
RADIAL BASIC DYNAMIC	2,225
MAXIMUM STATIC CAPACITY	6,120

NOTES:
1. BEARING IS PACKED WITH LITHIUM BASED #2 WEIGHT GREASE
2. ALL EXPOSED SURFACES HAVE BLACK OXIDE

WIS NO.	WSN NO.	DRAWING NO.
		CCNBH-32-B

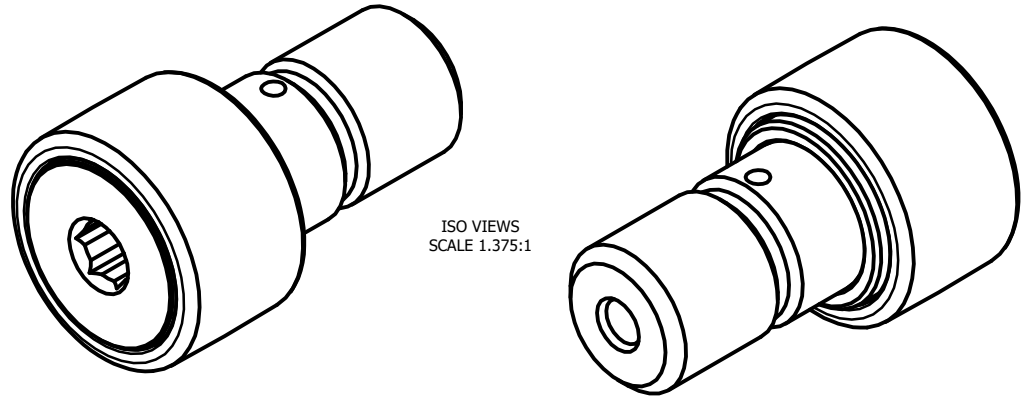

ISO VIEWS
SCALE 1.375:1

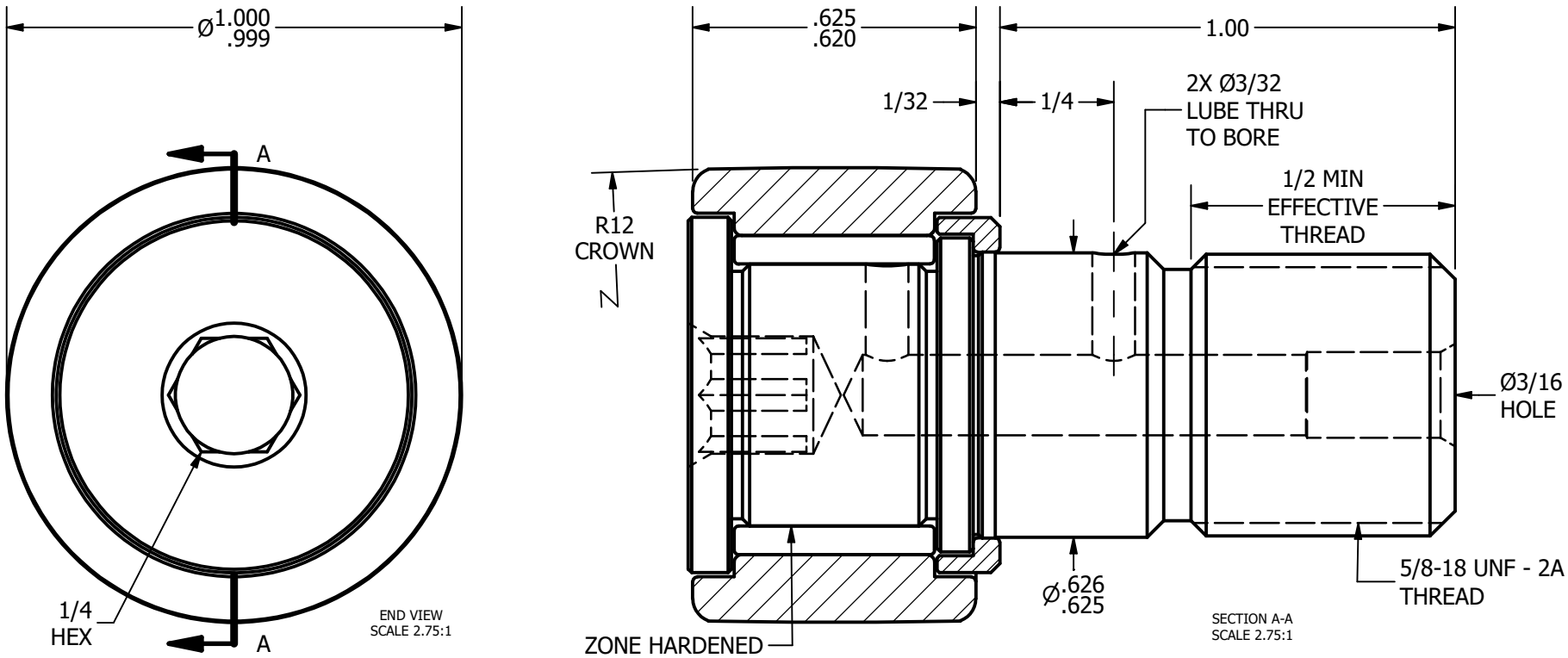

MATERIAL NOTES:

OUTER RACE - BEARING STEEL, HEAT TREATED
STUD - BEARING STEEL, ZONE HARDENED
NEEDLE ROLLER - BEARING STEEL, HEAT TREATED
WASHER - COLD ROLLED STEEL, HEAT TREATED

CUSTOMER PART#

.XX = ± .01
.XXX = ± .005
.XXXX = ± .0005
ANGLES = ± 1˚
INCH [METRIC]
FRACTION = ± 1/32

CHANGE NOTE:

CARTER MANUFACTURING IS NOT RESPONSIBLE FOR TYPOGRAPHICAL ERRORS

CARTER MANUFACTURING CO., INC.
GRAND HAVEN, MICHIGAN 49417

PART NAME: **ASSEMBLY** SHEET 1 OF 2

REVISION					
B	*AUTHOR. BY*	*DRAWN BY*	*CHK'D BY*	*SALES*	*MATERIAL*
	DB	EMD	MD	KR	NOTED
REV. BY	*DATE*	*DATE*	*DATE*	*DATE*	*DRAWING NO.*
SGW	4/24/2013	6/26/2006	4/24/2013	4/9/2013	**CCNBH-32-B**