DRW. NO. **CCNB-112**

NOTES:
1. **BEARING IS PACKED WITH GREASE**
2. **ALL EXPOSED SURFACES ARE BLACK OXIDED**

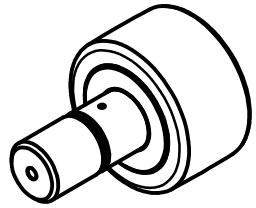

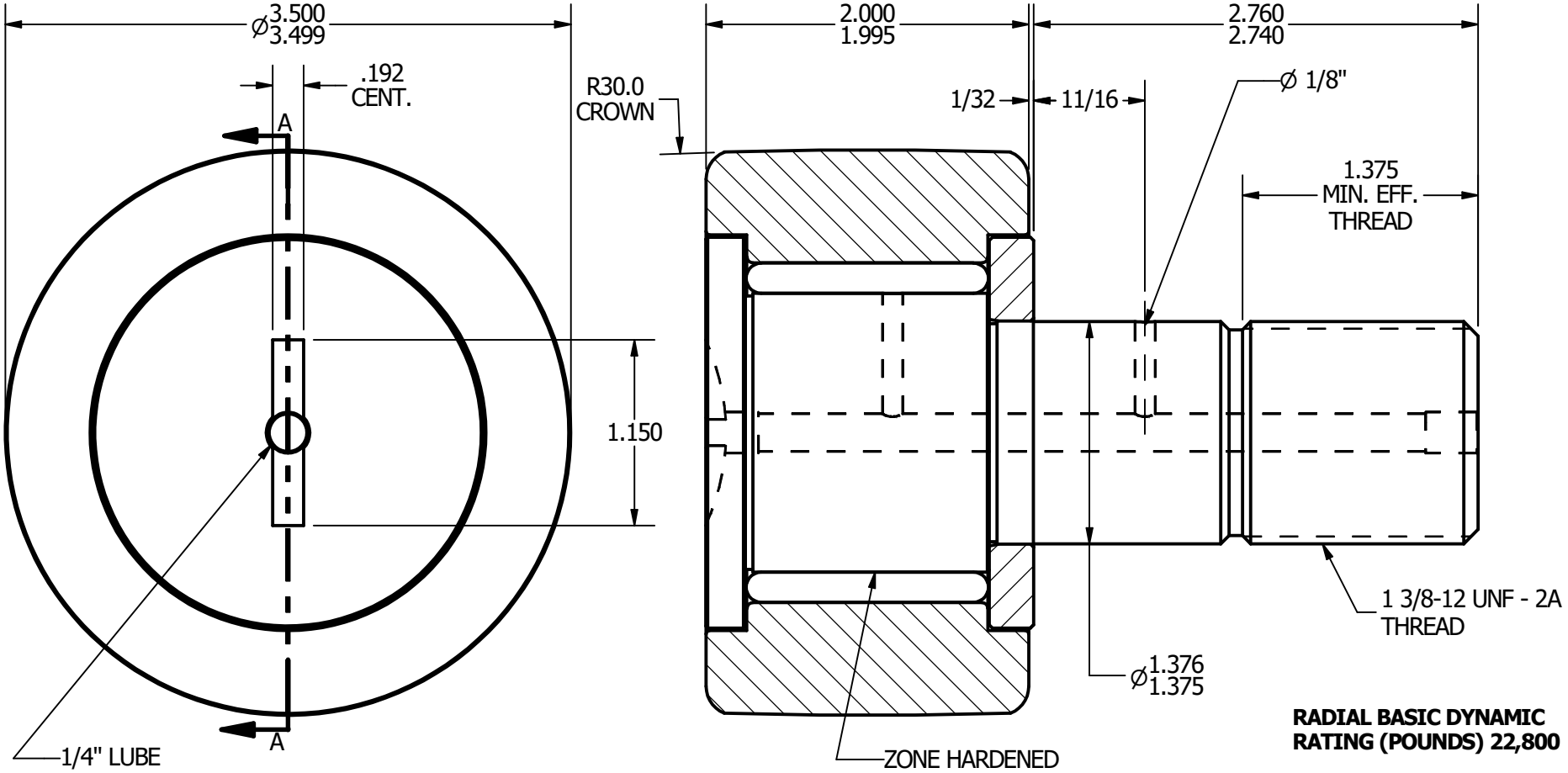

RADIAL BASIC DYNAMIC RATING (POUNDS) 22,800

MAXIMUM STATIC CAPACITY (POUNDS) 31,625

MATERIAL NOTES:

OUTER - BEARING STEEL, HEAT TREATED
STUD - BEARING STEEL, ZONE HARDENED
ROLLER - BEARING STEEL, HEAT TREATED
WASHER - COLD ROLLED STEEL, HEAT TREATED

CUSTOMER PART#

.XX = ± .01
.XXX = ± .005
.XXXX = ± .0005
ANGLES = ± 1°
INCH [METRIC]

CHANGE NOTE:

CARTER MANUFACTURING IS NOT RESPONSIBLE FOR TYPOGRAPHICAL ERRORS

CARTER MANUFACTURING CO., INC.
GRAND HAVEN, MICHIGAN 49417

PART NAME: **Assembly** SHEET 1 OF 2

REVISION	AUTHOR. BY	DRAWN BY	CHK'D BY	SALES	MATERIAL
A	JGV	EMD	JGV	KPR	NOTED
REV. BY	DATE	DATE	DATE	DATE	DRAWING NO.
EMD	7/7/2006	7/7/2006	7/7/2006	7/7/2006	**CCNB-112**