LOAD RATINGS		
RATING	Lbs	Newtons
RADIAL BASIC DYNAMIC	1,660	7,384
MAXIMUM STATIC CAPACITY	2,065	9,185

RECOMMENDED MOUNTING HOLE Ø		
Limit	Inch	mm
MIN	.502	12.7508
MAX	.504	12.8016

MAXIMUM CLAMPING TORQUE**		
Thread Type	Inch Lbs	Nm
LUBRICATED	47.5	5.5

NOTES:
1. BEARING IS PACKED WITH NLGI GRADE 2, LITHIUM BASED GREASE (UNLESS OTHERWISE SPECIFIED)
2. ALL EXPOSED SURFACES HAVE BLACK OXIDE
3. CUSTOM LASER ETCHING IS AVAILABLE UPON REQUEST
4. LIMITING SPEED:
   A. GREASE = 6,400 RPM

MS NO.	NSN NO.	DRAWING NO. CNBE-24-S

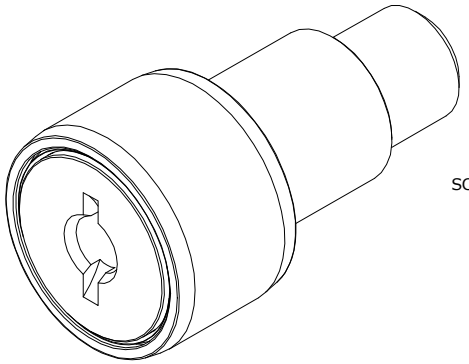

ISO VIEW
SCALE 1.750:1

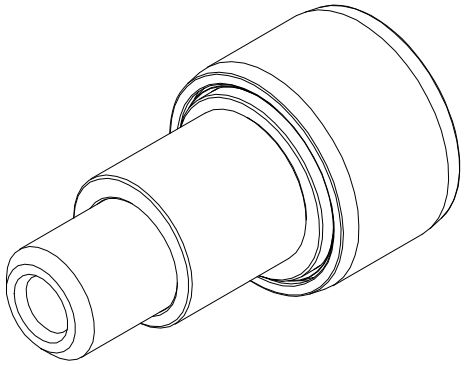

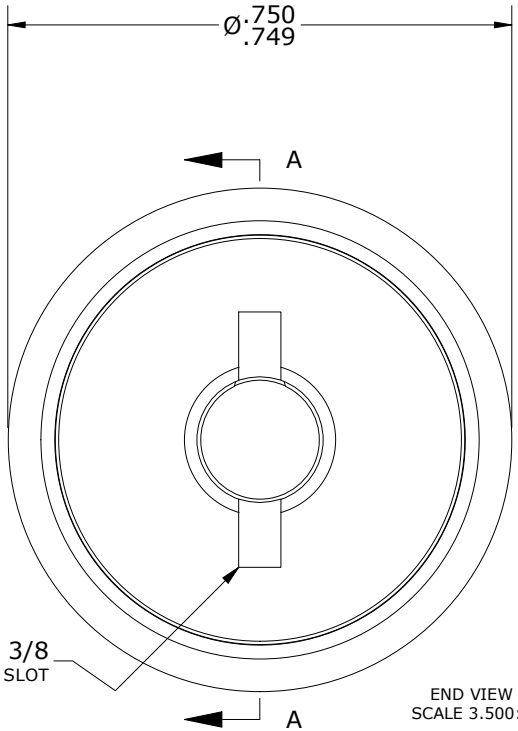

END VIEW
SCALE 3.500:1

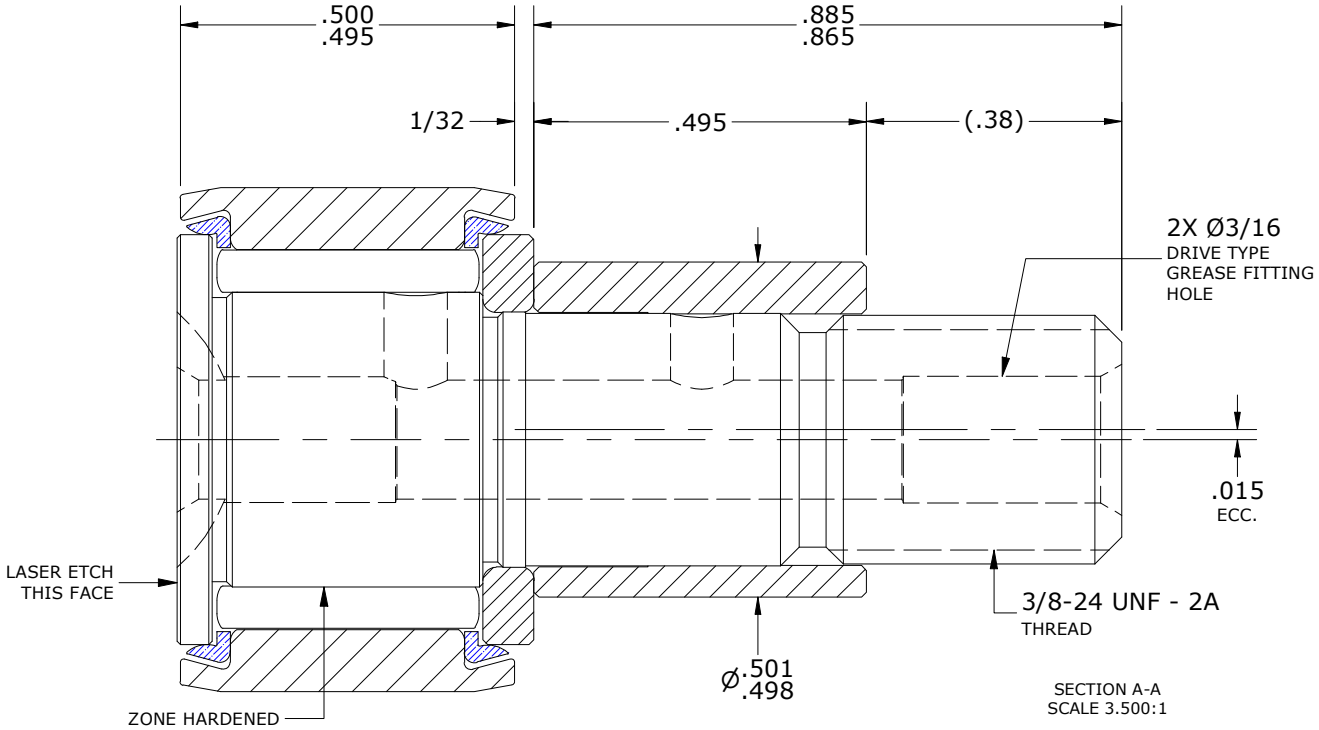

SECTION A-A
SCALE 3.500:1

***TORQUE SPECIFICATION IS BASED ON LUBRICATED THREADS, IF USING DRY THREADS DOUBLE TORQUE VALUE*

MATERIAL NOTES:

OUTER RING - BEARING STEEL, HEAT TREATED
STUD - BEARING STEEL, ZONE HARDENED
NEEDLE ROLLER(S) - BEARING STEEL, HEAT TREATED
WASHER - BEARING STEEL, HEAT TREATED
ECCENTRIC SLEEVE - STEEL
SEAL(S) - SYNTHETIC

CUSTOMER PART#	XX = ± .01 XXX = ± .005 XXXX = ± .0005 ANGLES = ± 1˚ INCH [METRIC] FRACTION = ± 1/32	CARTER MANUFACTURING IS NOT RESPONSIBLE FOR TYPOGRAPHICAL ERRORS	**CARTER MANUFACTURING CO., INC.** GRAND HAVEN, MICHIGAN 49417			
		REVISION	PART NAME: ASSEMBLY		PRODUCT TYPE: CNBE	
ENGINEERING CHANGE ORDER NOTE		D	*AUTHOR BY* HG	*DRAWN BY* JAF	*CHK'D BY* MD	*SALES* NC	*MATERIAL* NOTED
			REVISON BY SGW	*DATE* 7/23/2021	*DATE* 6/22/2006	*DATE* 7/23/2021	*DATE* 6/4/2020	*SHEET* 1 OF 2