DRW. NO. **CCNBE-20-N**

NOTES:
1. **BEARING PACKED WITH GREASE**
2. **ALL EXPOSED SURFACES BLACK OXIDED**

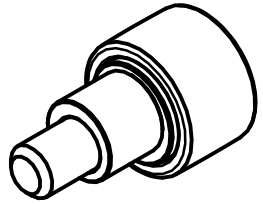

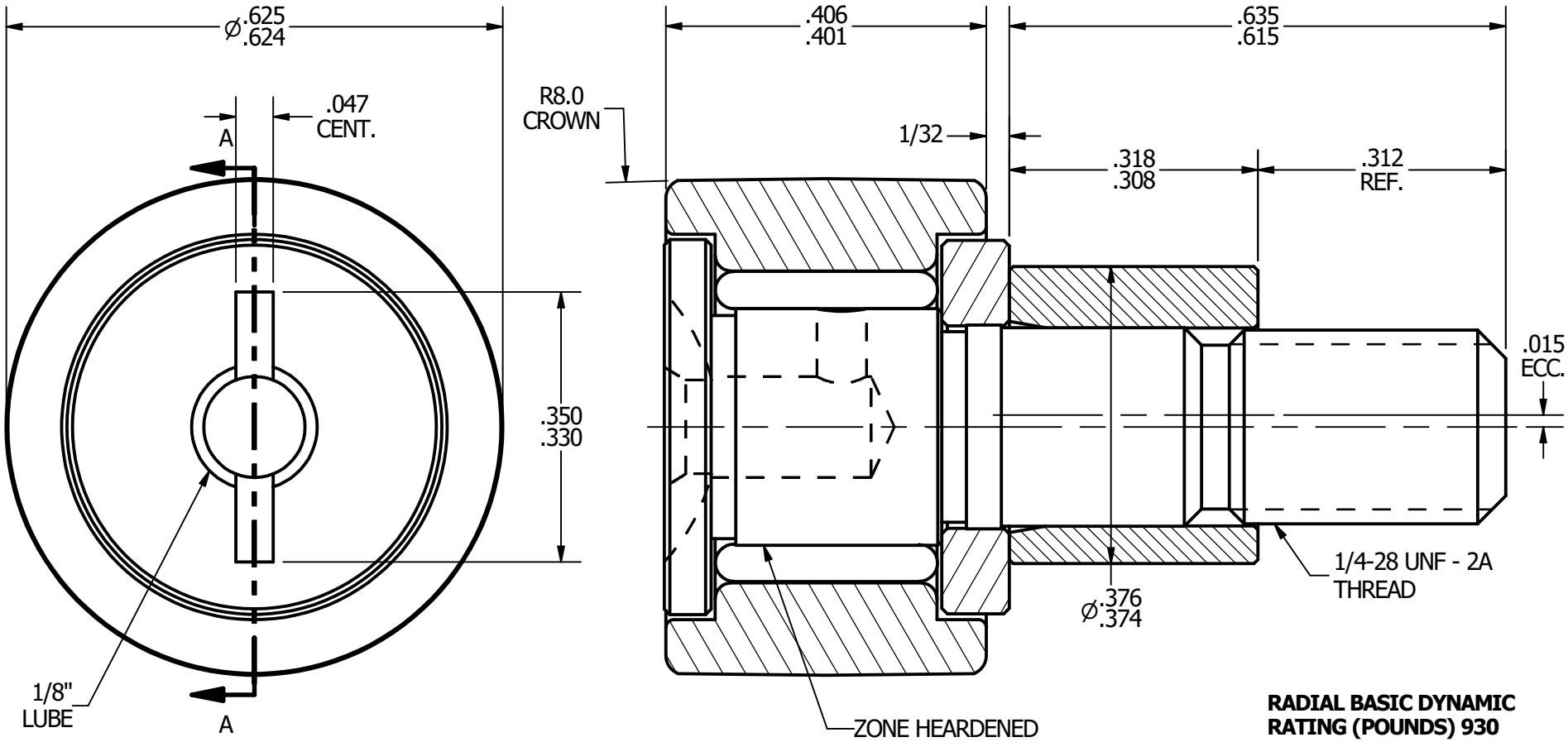

RADIAL BASIC DYNAMIC RATING (POUNDS) 930

MAXIMUM STATIC CAPACITY (POUNDS) 1085

MATERIAL NOTES:

OUTER - BEARING STEEL, HEAT TREATED
STUD - BEARING STEEL, ZONE HARDENED
ROLLER - BEARING STEEL, HEAT TREATED
WASHER - COLD ROLLED STEEL, HEAT TREATED
ECCENTRIC SLEEVE - COLD ROLLED STEEL

CUSTOMER PART#

CHANGE NOTE:

.XX = ± .01
.XXX = ± .005
.XXXX = ± .0005
ANGLES = ± 1°
INCH [METRIC]

CARTER MANUFACTURING IS NOT RESPONSIBLE FOR TYPOGRAPHICAL ERRORS

CARTER MANUFACTURING CO., INC.
GRAND HAVEN, MICHIGAN 49417

PART NAME: **ASSEMBLY** SHEET 1 OF 2

REVISION					
A	*AUTHOR. BY*	*DRAWN BY*	*CHK'D BY*	*SALES*	*MATERIAL*
	JGV	EMD	JGV	KPR	NOTED
REV. BY	*DATE*	*DATE*	*DATE*	*DATE*	*DRAWING NO.*
EMD	6/20/2006	6/20/2006	6/20/2006	6/19/2006	**CCNBE-20-N**